February 14, 2017
Revision: B

Celseon® Air Cooled Condensing Unit

Model: AKA4457YAAD*
BoM: 2G222- R-134a 1/2 HP**

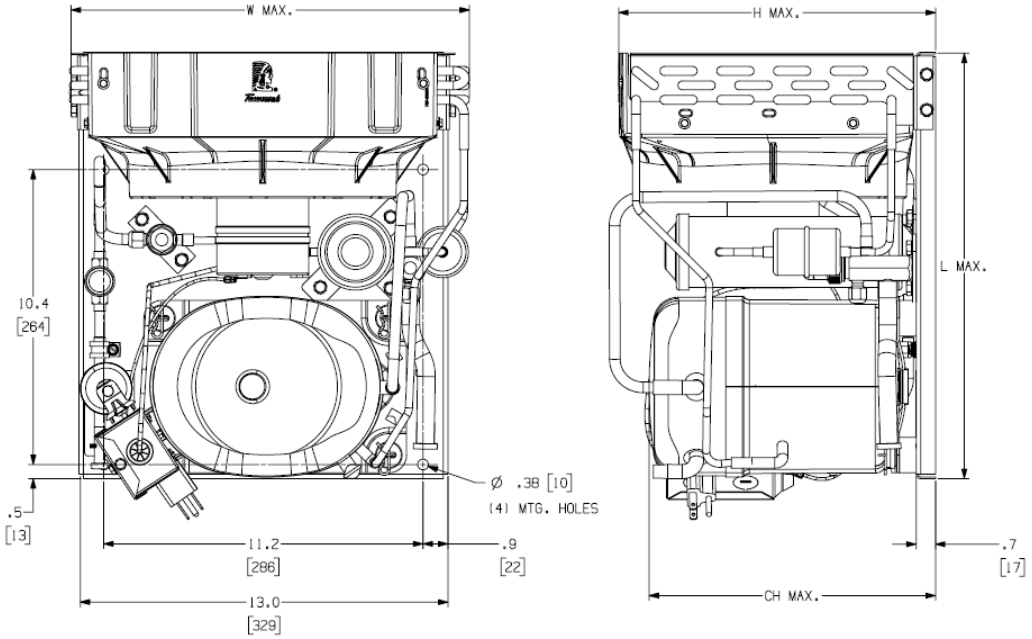

Model	Dimensions, inches				Line Connection*		Pumpdown	Air	Oil Ch	Gr. Wt.
	L	W	H	CH	Suction	Liquid	90 °F 90%	SCFM	Oz.	Lbs.
AKA4457YAADA	15.0	14.0	11.5	10.1	3/8” S	1/4” S	N/A	185	17	52
AKA4457YAADG					5/8” S	3/8” S	2.5 lbs			54
AKA4457YAADH					5/8” S	3/8” S	N/A			52
AKA4457YAADK					3/8” S	1/4” S				52
AKA4457YAADC					5/8” S	3/8” S	2.5 lbs			54
AKA4457YAADS					5/8” S	3/8” S	N/A			52
AKA4457YAADJ					5/8” S	3/8” S	2.5 lbs			54
AKA4457YAADP					5/8” S	3/8” S	2.5 lbs			54

* F = Flare, S = Solder, RF or RS = Rotolock with Flare or Solder Connections, C = Compression Fitting
Factory charge: 20 PSIG Nitrogen – **MUST BE EVACUATED**

		Ambient Temperatures											
Evaporator T,		80°F			90°F			100°F			110°F		
°F	PSIG	BTUH	Watts	Cond T	BTUH	Watts	Cond T	BTUH	Watts	Cond T	BTUH	Watts	Cond T
20	18.4	3874	648	109	3503	655	117	3110	657	126	2764	658	134
25	22.1	4313	693	113	3918	705	121	3498	710	129	3125	714	137
30	26.1	4760	742	117	4334	757	125	3887	768	133	3481	774	141
35	30.4	5214	794	120	4752	813	128	4278	828	136	---	---	---
40	35.1	5675	849	124	5171	873	132	4671	892	140	---	---	---
45	40.1	6143	908	128	5665	937	136	---	---	---	---	---	---
50	45.5	6618	970	132	6015	1004	140	---	---	---	---	---	---
55	51.3	7101	1035	136	---	---	---	---	---	---	---	---	---

60 Hz Performance

Return gas temp. 65°F, 5°F sub cooling

February 14, 2017
Revision: B

Specifications/ Parts:

Unit Model	**AKA4457YAADA**
Unit Bill of Material	**2G222-09**
Refrigeration Range	20° F to 55° F
Design Pressure Low	150
Design Pressure High	450
Nominal Volts-Hz-Ph	115/60/1
Voltage Range	103 to 127
Min. Circuit Ampacity	12.3
Max. Fuse Size (amps)	20
Compressor Model	AKA4460YXA
Comp. Bill of Material	AK168AT-037-J7
Compressor RLA/LRA	9.5/48
Overload	8300MRAG17
Relay	8200EMBJ97
Run Capacitor	N/A
Start Capacitor	85PS165C96
Fan Motor	810-10095
Fan Motor RLA	.38
Fan Blade	515-10002
Fan Shroud/Guard Combo	707-00004
Condenser	506-10004
Unit Drawing	DGU1970-03
Wiring Diagram	91266-01
Replacement Kit: Relay	K71-03
Replacement Kit: O/L	K90-23
Replacement Kit: St. Cap	K146-25

Unit Model	**AKA4457YAADG**
Unit Bill of Material	**2G222-19**
Receiver Tank	510-10000
Liquid Valve	56659
Suction Valve	56660
Unit Model	**AKA4457YAADH**
Unit Bill of Material	**2G222-29**
Liquid Valve	56659
Suction Valve	56660
Unit Model	**AKA4457YAADK**
Unit Bill of Material	**2G222-39**
Power Cord	85106-14
Unit Model	**AKA4457YAADC**
Unit Bill of Material	**2G222-59**
Receiver Tank	510-10000
Liquid Valve	56659
Suction Valve	56660
Power Cord	85106-14
Unit Model	**AKA4457YAADS**
Unit Bill of Material	**2G222-69**
Liquid Valve	56659
Suction Valve	56660
Power Cord	85106-14
Unit Model	**AKA4457YAADJ**
Unit Bill of Material	**2G222-79**
Receiver Tank	510-10000
Liquid Valve	56659
Suction Valve	56660
Filter Drier	71116
Sight Glass	70084
Unit Model	**AKA4457YAADP**
Unit Bill of Material	**2G222-89**
Receiver Tank	510-10000
Liquid Valve	56659
Suction Valve	56660
Power Cord	85106-14
Filter Drier	71116
Sight Glass	70084
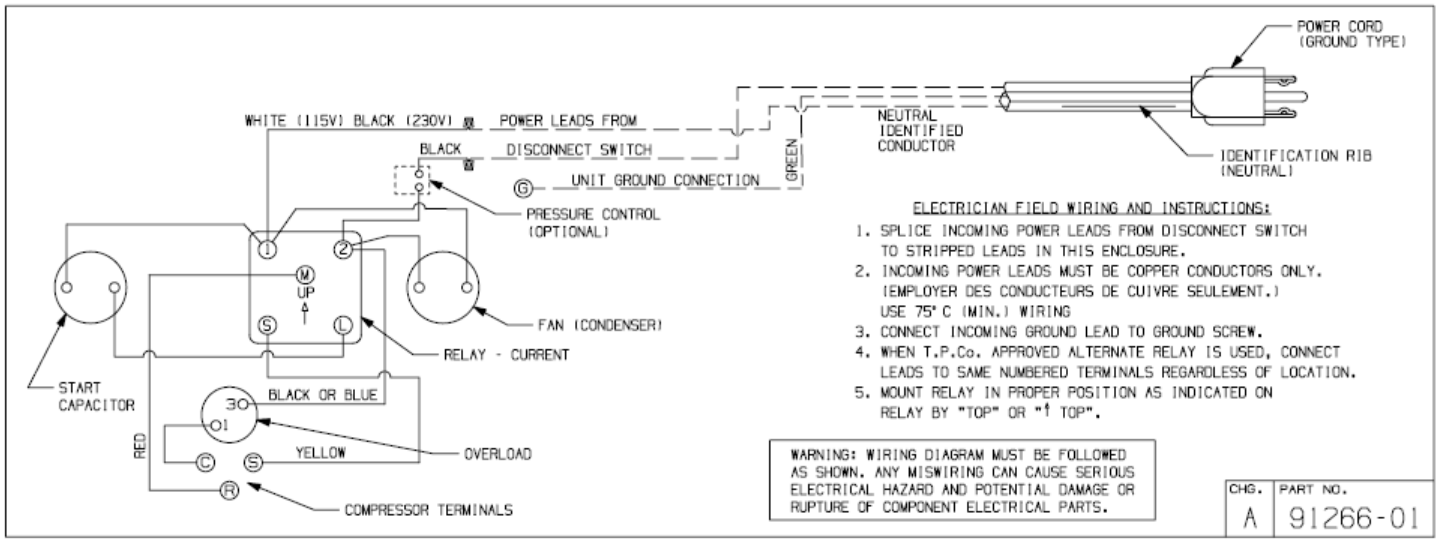
Electrical Diagram Page 3